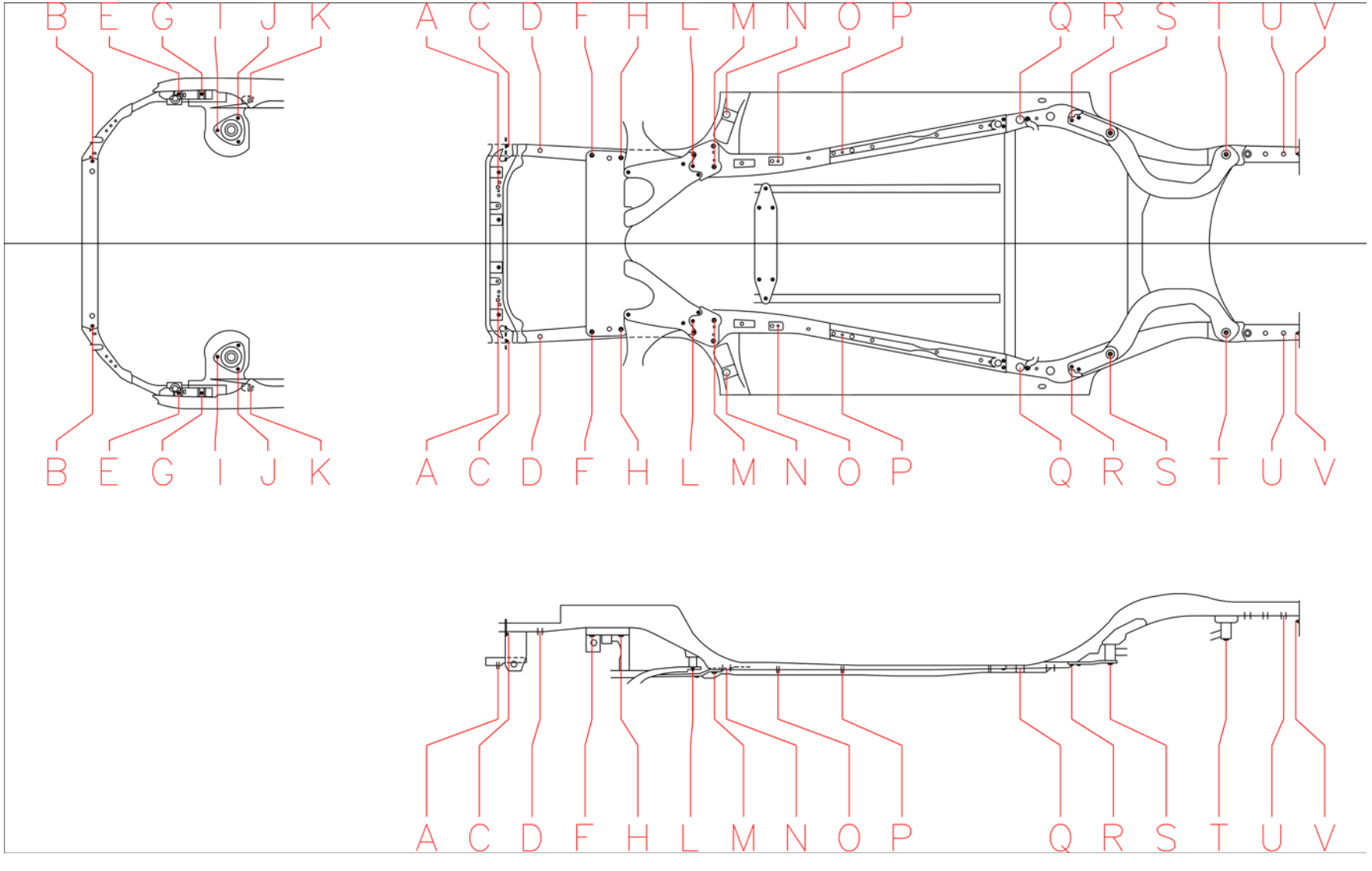
B E G I J K
A C D F H L M N O P
Q R S T U V
B E G I J K
A C D F H L M N O P
Q R S T U V
A C D F H L M N O P
Q R S T U V

PLEASE SEE "HOW TO USE DIMENSION INFORMATION" SECTION

2670 (105 1/8) WHEELBASE

BOTTOM VIEW

Dimensions from Centerline are Combined When Equal
Divide by 2 for Individual Dimensions from Centerline
All Bolts and Holes are Measured to Center
Unless Otherwise Described in "Measuring Points"

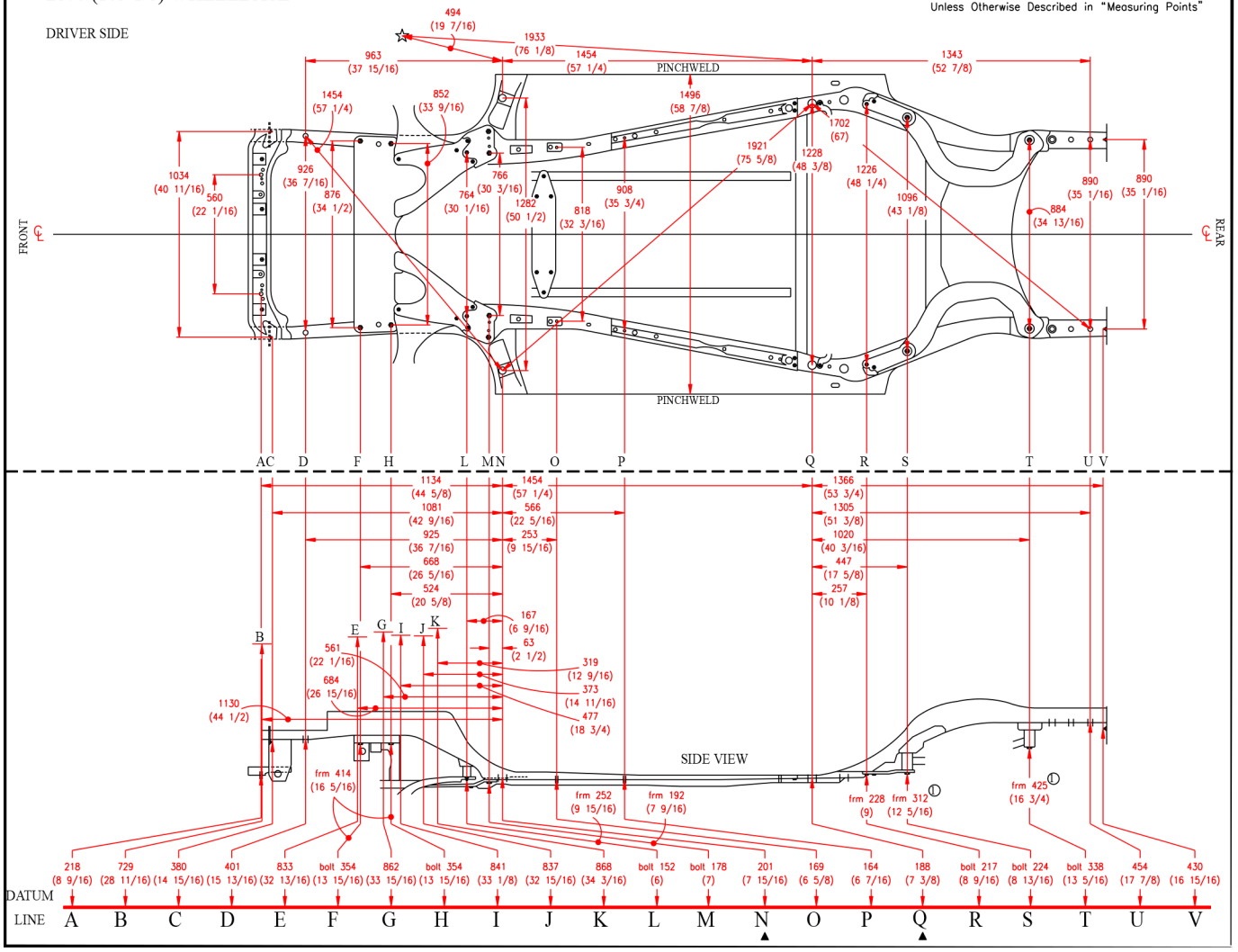

MEASURING POINTS

A = 9 (3/8) – Threaded
B = Bolt – Core Support
C = Lower Outer Stud – Bumper
D = 18 (11/16)
E = Front Bolt – Fender
F = Bolt
G = Rear Bolt – Fender
H = Bolt
I = Front Stud – Strut
J = Outer Stud – Strut
K = 12 (1/2) – Apron
L = Stud
M = Bolt
N = 25 (1)
O = 8 (5/16)
P = 8 (5/16)
Q = 30 (1 3/16)
R = Bolt
S = Bolt
T = Bolt
U = 18 (11/16)
V = Lower Stud – Bumper

℄ – CENTER LINE

DS – DRIVER SIDE
PS – PASSENGER SIDE

– BOLTS
– RIVETS
– HOLES
– DATUM LINE ZERO POINT
– LOWER BALL JOINT – LOADED
– LOWER BALL JOINT – UNLOADED

A – WIDTH DIMENSION ON UPPER BODY VIEW

frm – MEASUREMENT TO SURFACE OF FRAME (PARTS REMOVED)
bolt – MEASUREMENT TO BOLT

= Non-Verified Factory Dimension

ENGINE COMPARTMENT

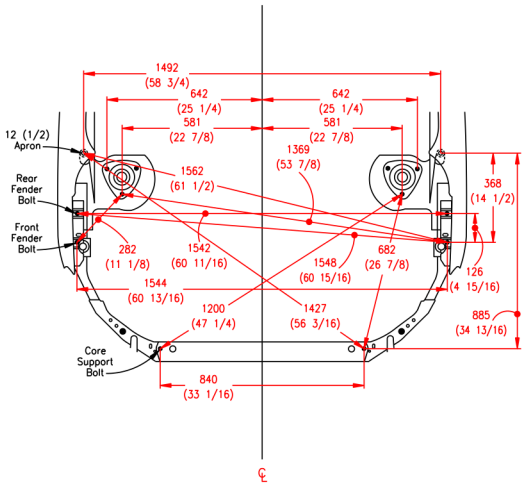

WINDSHIELD

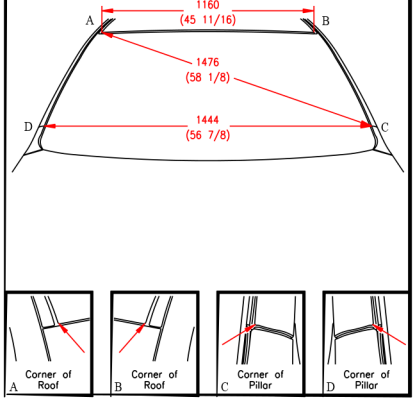

FRONT DOOR

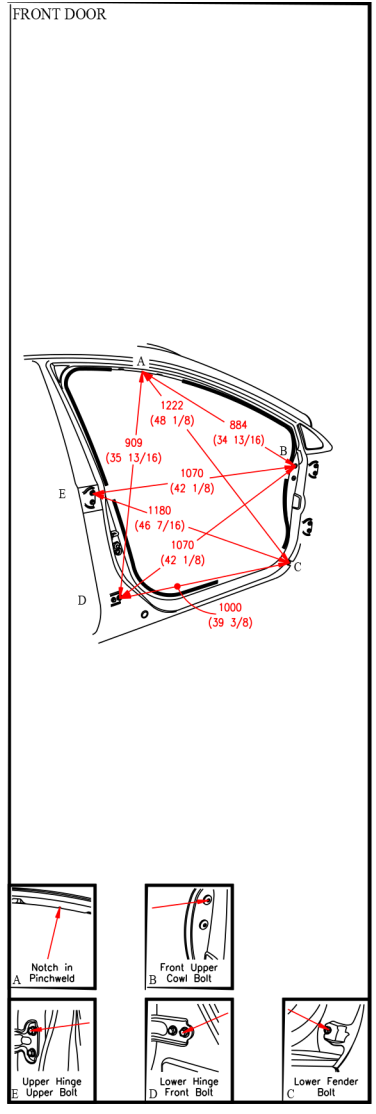

REAR DOOR

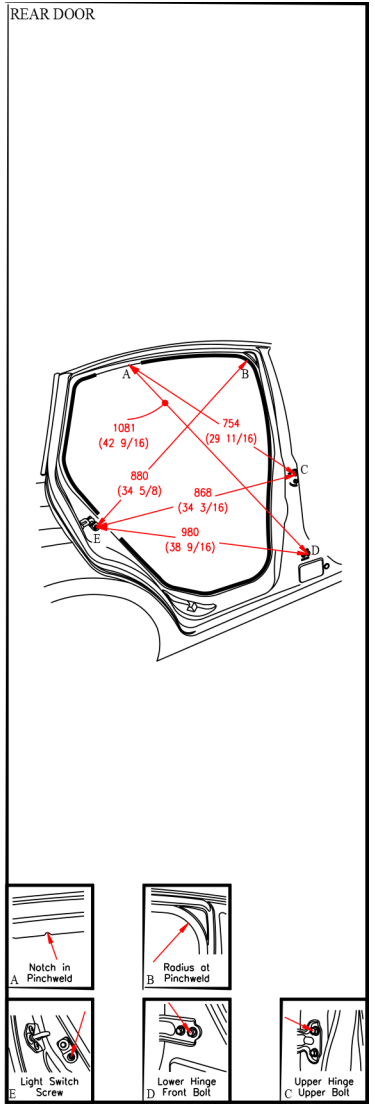

LIFTGATE

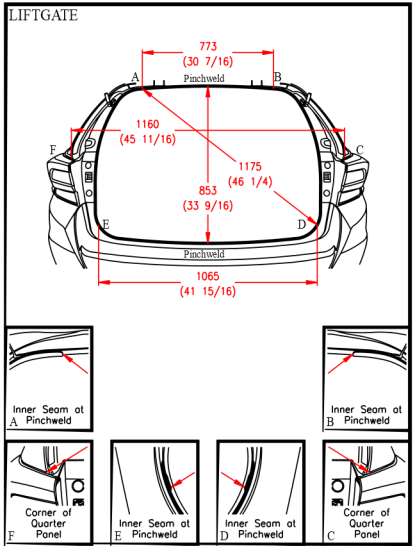

INSIDE PASSENGER COMPARTMENT

"A" PILLAR

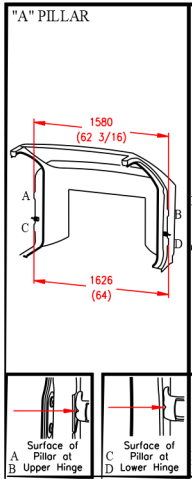

"B" PILLAR

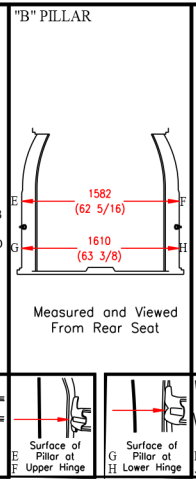
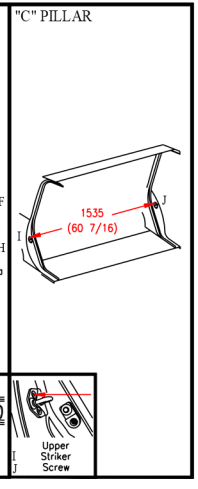
"C" PILLAR